ROOF WITH THERMAL INSULATION – PAVEMENT EMBEDDED IN CONCRETE, REVERSE ORDER OF LAYERS
PLASTIC FOIL

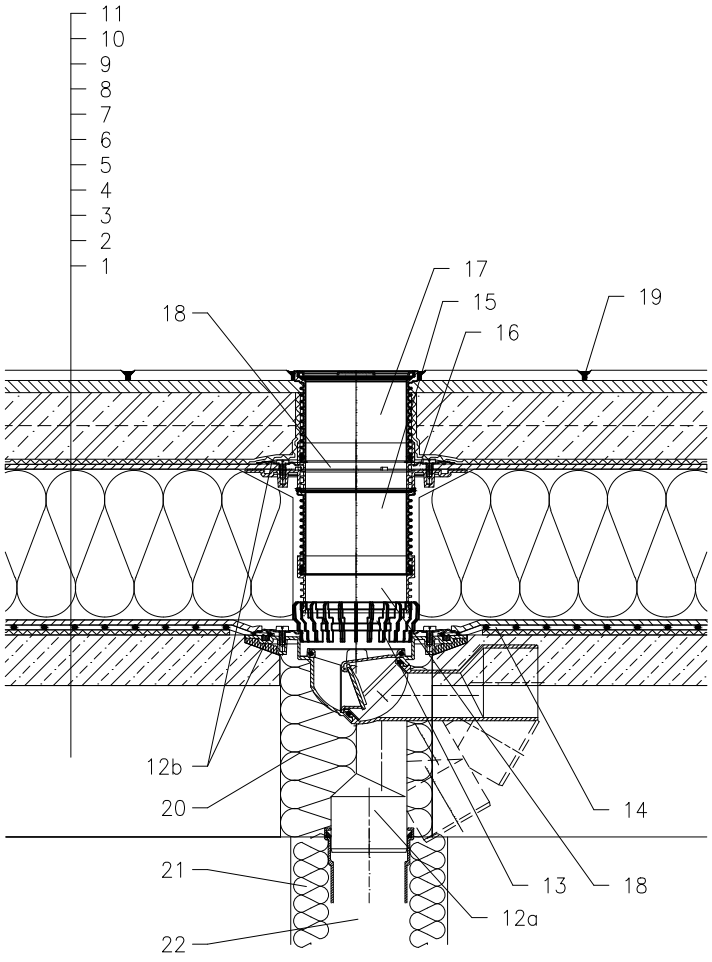

1 SUPPORT CONSTRUCTION
2 CONCRETE GRAVITY LAYER
3 SEPARATING AND DILATATION LAYER
4 PLASTIC FOIL WATERPROOFING
5 SEPARATING AND DRAINAGE LAYER
6 XPS THERMAL INSULATION
7 DRAINAGE LAYER
8 FILTER LAYER
9 CONCRETE SLAB
10 MORTAR BED OR GLUE
11 PAVEMENT
12a TERRACE DRAIN HL80 WITH FROST–PROOF FLAP AND FLANGE
LOAD CLASSIFICATION K3 (MAX 300 kg)
12b SEALING KIT HL83.0 – WITHOUT SHEETING,
(ALL–PURPOSE FOR UNRUFFED ROOF SHEETINGS)
(alternative HL83.P – WHEN USING PVC SHEETINGS)
13 DRAINAGE RING HL180
14 PRE–CUT PART FOR SEALING COLLAR, SEE TOPIC "ATTACHEMENTS"
15 EXTENSION HL85N WITH FLANGE
INCL. O–RING
16 NO TIGHT CONNECTION BECAUSE OF DISCHARGE OF LEAKAGE WATER
17 EXTENSION WITH STAINLESS STEEL GRATE 115x115 mm AND PLASTIC FRAME 123x123 mm
(INCLUDED IN HL80)
18 PRODLOUŽOVACÍ EXTENSION HL340N
19 JOINT FILLER
20 ASSEMBLY FOAM
21 DOWNPIPE THERMAL INSULATION
22 DOWNPIPE

NOTICE:

TO HEAT THE DRAIN, YOU MAY USE HEATING KIT HL82 WITH SELF–REGULATING HEAT SOURCE 18W/220V. (THE HEATING TAPE MUST BE WRAPPED AROUND THE DRAIN BODY BEFORE INSTALLATION).
RECOMMENDED BOREHOLE DIAMETER IS ø185mm,▱185x340mm.
DURING INSTALLATION TAKE CARE, THAT THE FLANGE POSITION IS ON THE LOWEST LEVEL OF DRAINAGE. WE RECOMMEND, TO SITE IT APPR. 1cm BELOW THE SCREED.
TO AVOID CONDENSATE WATER TAKE CARE OF THERMAL INSULATION ON THE CONSTRUCTION SITE.

132112AX